# TITAN X7 碳板机架组装说明书

## TITAN X7 Frame Assembly Guide

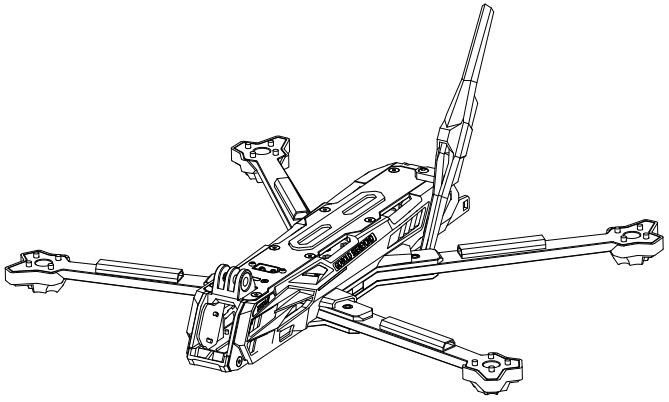

## 1 组装说明:

## Part One

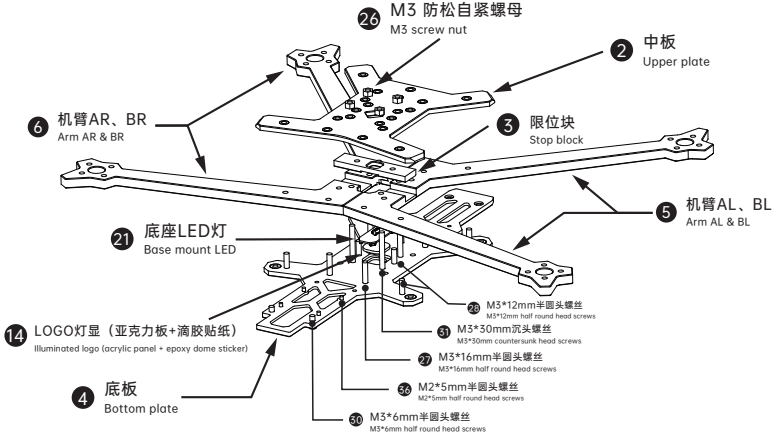


## 包装里有 / Packing list:

| | | |
|---|---|---|
| 1 | 顶板<br>Top plate | X1 |
| 2 | 中板<br>Middle plate | X1 |
| 3 | 限位块<br>Stop block | X1 |
| 4 | 底板<br>Bottom plate | X1 |
| 5 | 机臂AL、BL<br>Arm AL & BL | X1 |
| 6 | 机臂AR、BR<br>Arm AR & BR | X1 |
| 7 | 摄像头铝合金侧板<br>CNC camera side plate | X2 |
| 8 | 侧板+发光板（已安装好）<br>Side panels + LED board (Pre-install LED) | X2 |
| 9 | 尾座<br>Antenna mount | X1 |
| 10 | 接收机座TPU打印件<br>Receiver mount TPU | X1 |
| 11 | GoPro底座<br>GoPro bottom stand | X1 |
| 12 | 脚垫<br>Arm guard | X4 |
| 13 | 前保护杠<br>Front bumpers | X1 |
| 14 | LOGO灯显（亚克力板+滴胶贴纸）<br>Illuminated logo (acrylic panel + epoxy dome sticker) | X1 |
| 15 | 摄像头硅胶侧板<br>Silicone camera side plate | X2 |
| 16 | 天线固定套TPU打印件<br>TPU antenna holder | X1 |
| 17 | 蜂鸣器&固定座TPU打印件<br>Buzzer & TPU mount | X1 |
| 18 | Type-C 转接板A<br>USB-C adapter board A | X1 |
| 19 | 格纹硅胶电池防滑垫<br>Battery pad | X1 |
| 20 | 集线管<br>Motor wire shield tube | X4 |
| 21 | 底座LED灯<br>Base mount LED | X1 |
| 22 | XT60EW-M 公头<br>XT60EW-M battery plug | X1 |
| 23 | M3*32圆形网纹铝柱<br>M3*32mm standoff | X3 |
| 24 | M3*23圆形网纹铝柱<br>M3*23mm standoff | X2 |
| 25 | M3*22圆形网纹铝柱<br>M3*22mm standoff | X5 |
| 26 | M3 防松自紧螺母<br>M3 screw nut | X5 |
| 27 | M3*16mm半圆头螺丝<br>M3*16mm half round head screws | X5 |
| 28 | M3*12mm半圆头螺丝<br>M3*12mm half round head screws | X12 |
| 29 | M3*10mm半圆头螺丝<br>M3*10mm half round head screws | X18 |
| 30 | M3*6mm半圆头螺丝<br>M3*6mm half round head screws | X3 |
| 31 | M3*30mm沉头螺丝<br>M3*30mm countersunk head screws | X5 |
| 32 | M3*12mm沉头螺丝<br>M3*12mm countersunk head screws | X7 |
| 33 | M3*8mm沉头螺丝<br>M3*8mm countersunk head screws | X3 |
| 34 | M2.5*8mm半圆头螺丝<br>M2.5*8mm half round head screws | X3 |
| 35 | M2*5mm半圆头带垫螺丝<br>M2*5mm half round head screws with washers | X5 |
| 36 | M2*5mm半圆头螺丝<br>M2*5mm half round head screws | X5 |
| 37 | M2*4mm半圆头螺丝<br>M2*4mm half round head screws | X7 |
| 38 | M2*8mm沉头自攻螺丝<br>M2*8mm countersunk head self-tapping screws | X3 |

### (附赠)/(Additional parts)

| | | |
|---|---|---|
| 39 | LED导光条<br>LED Light Tube | X1 |
| 40 | 20*300mm防滑电池扎带<br>20*300mm Battery strap | X2 |
| 41 | 套机通用贴纸2026<br>Sticker 2026 | X1 |
| 42 | 内六角扳手<br>Allen wrench | X1 |
| 43 | M5防松螺母<br>M5 screw nut | X1 |
| 44 | M5*20mm平头螺丝<br>M5*20 hex screw | X1 |
| 45 | 转接线<br>Adapter cables | X2 |
| 46 | 双头端子线<br>Terminal connector | X4 |
| 47 | 硅胶线<br>Power cable | X2 |
| 48 | 防松垫片<br>Lock washers | X2 |
| 49 | Type-C 转接板B<br>USB-C adapter board B | X1 |
| 50 | 透明热缩管<br>Transparent clear heat shrink tubing | X2 |

## 2 组装说明:
## Part Two

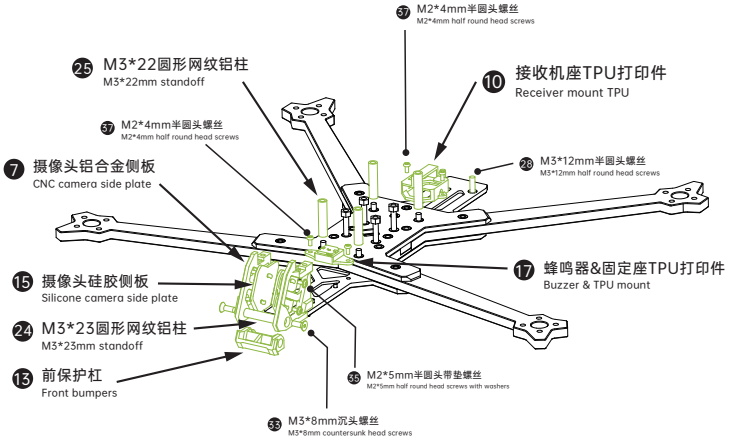


## 3 组装说明:
## Part Three

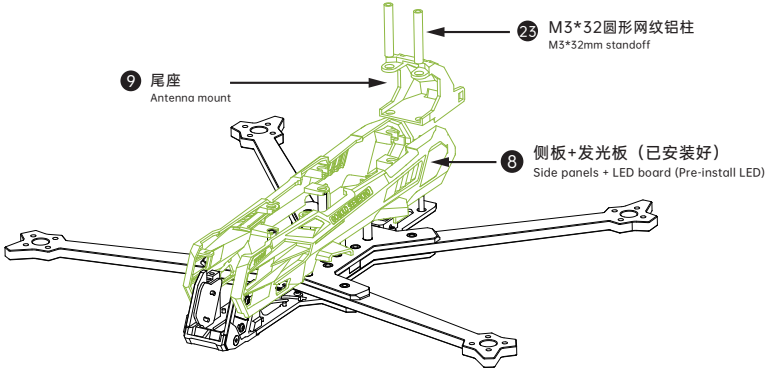


## 4 组装说明:
## Part Four

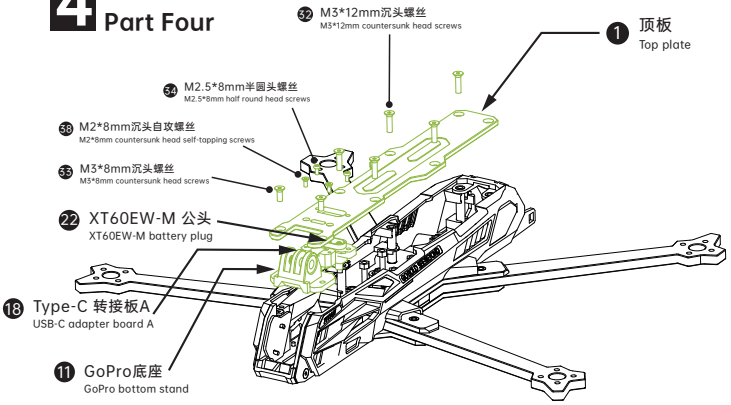


## 5 组装说明:
## Part Five

