TITAN X5 碳板机架组装说明书

TITAN X5 Frame Assembly Guide

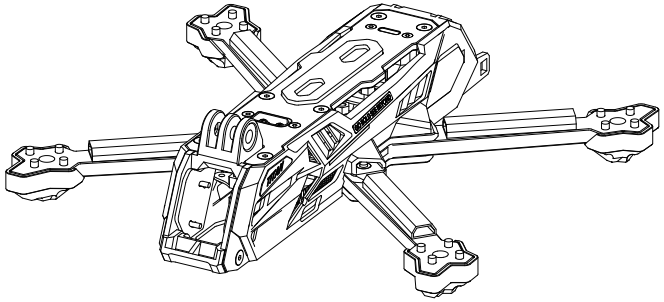

1 组装说明:

Part One

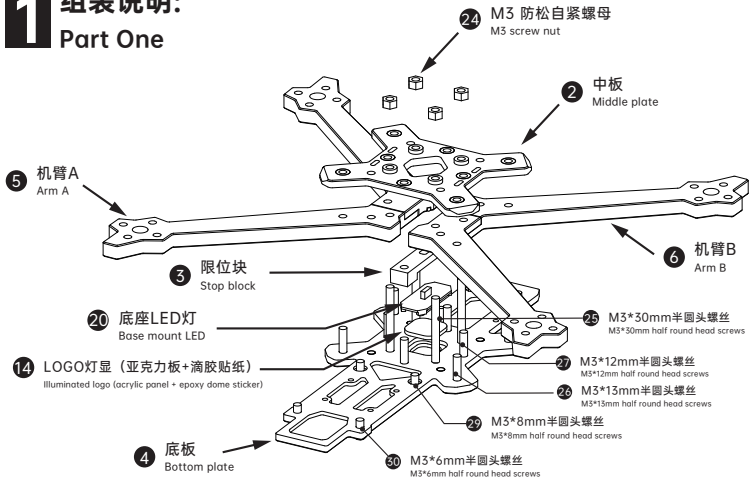

包装里有 / Packing list:

1	顶板 Top plate	X1
2	中板 Middle plate	X1
3	限位块 Stop block	X1
4	底板 Bottom plate	X1
5	机臂A Arm A	X2
6	机臂B Arm B	X2
7	摄像头铝合金侧板 CNC camera side plate	X2
8	侧板+发光板（已安装好） Side panels + LED board (Pre-install LED)	X2
9	尾座 Antenna mount	X1
10	接收机座TPU打印件 Receiver mount TPU	X1
11	GoPro底座 GoPro bottom stand	X1
12	脚垫 Arm guard	X4
13	前保护杠 Front bumpers	X1
14	LOGO灯显（亚克力板+滴胶贴纸） Illuminated logo (acrylic panel + epoxy dome sticker)	X1
15	摄像头硅胶侧板 Silicone camera side plate	X2
16	蜂鸣器&固定座TPU打印件 Buzzer & TPU mount	X1
17	Type-C 转接板A USB-C adapter board A	X1
18	格纹硅胶电池防滑垫 Battery pad	X1
19	集线管 Motor wire shield tube	X4
20	底座LED灯 Base mount LED	X1
21	XT60EW-M公头&电流计 XT60EW-M battery plug & current sensor	X1
22	M3*32圆形网纹铝柱 M3*32mm standoff	X5
23	M3*23圆形网纹铝柱 M3*23mm standoff	X2
24	M3 防松自紧螺母 M3 screw nut	X5
25	M3*30mm半圆头螺丝 M3*30mm half round head screws	X5
26	M3*13mm半圆头螺丝 M3*13mm half round head screws	X5
27	M3*12mm半圆头螺丝 M3*12mm half round head screws	X5
28	M3*10mm半圆头螺丝 M3*10mm half round head screws	X18
29	M3*8mm半圆头螺丝 M3*8mm half round head screws	X4
30	M3*6mm半圆头螺丝 M3*6mm half round head screws	X3
31	M3*10mm沉头螺丝 M3*10mm countersunk head screws	X9
32	M2*8mm半圆头自攻螺丝 M2*8mm pan head self-tapping screws	X3
33	M2*5mm半圆头带垫螺丝 M2*5mm half round head screws with washer	X5
34	M2*5mm半圆头螺丝 M2*5mm half round head screws	X5
35	M2*8mm薄头螺丝 M2*8mm low-profile head screws	X3
36	M2*6mm沉头自攻螺丝 M2*6mm countersunk head self-tapping screws	X3
37	M2.5*10mm沉头螺丝 M2.5*10mm countersunk head screws	X3

(附赠)/(Additional parts)

38	LED导光条 LED Light Tube	X1
39	15*250mm防滑电池扎带 15*250mm Battery strap	X2
40	套机通用贴纸2026 Sticker 2026	X1
41	内六角扳手 Allen wrench	X1
42	M5防松螺母 M5 screw nut	X1
43	M5*20mm平头螺丝 M5*20 hex screw	X1
44	转接线 Adapter cables	X2
45	双头端子线 Terminal connector	X3
46	硅胶线 Power cable	X3
47	防松垫片 Lock washers	X2
48	Type-C 转接板B USB-C adapter board B	X1

2 组装说明:
Part Two

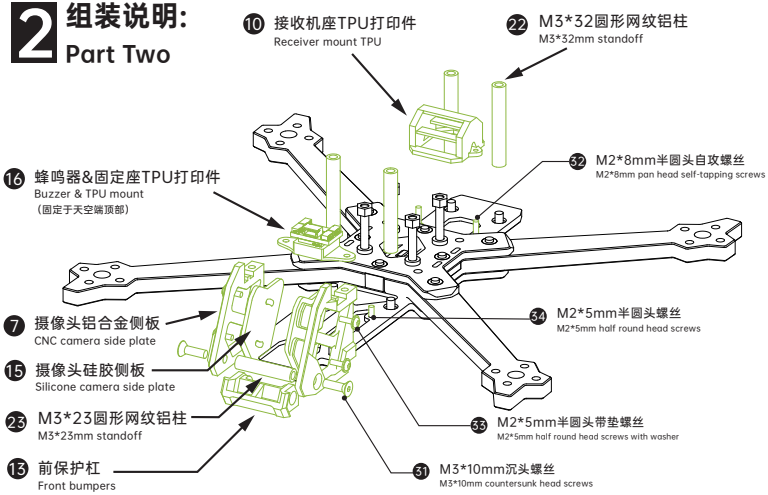

3 组装说明:
Part Three

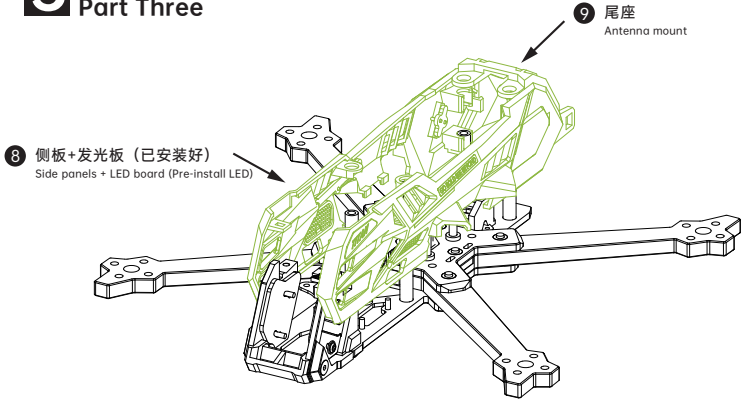

4 组装说明:
Part Four

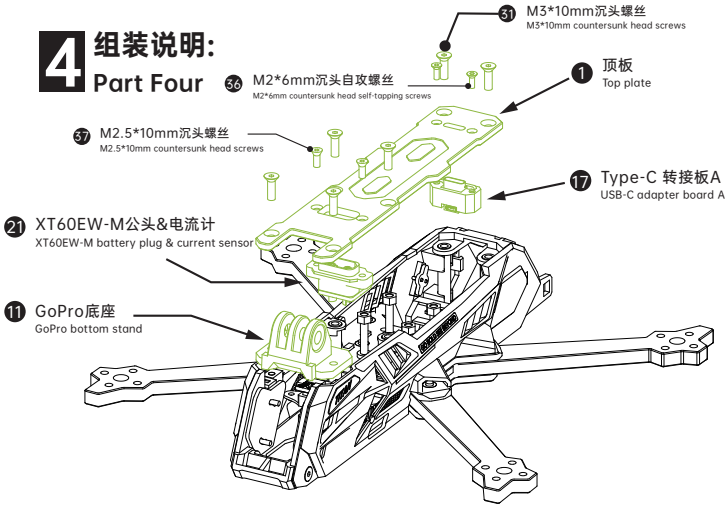

5 组装说明:
Part Five

