TITAN X3 机架组装说明书

TITAN X3 FRAME ASSEMBLY GUIDE

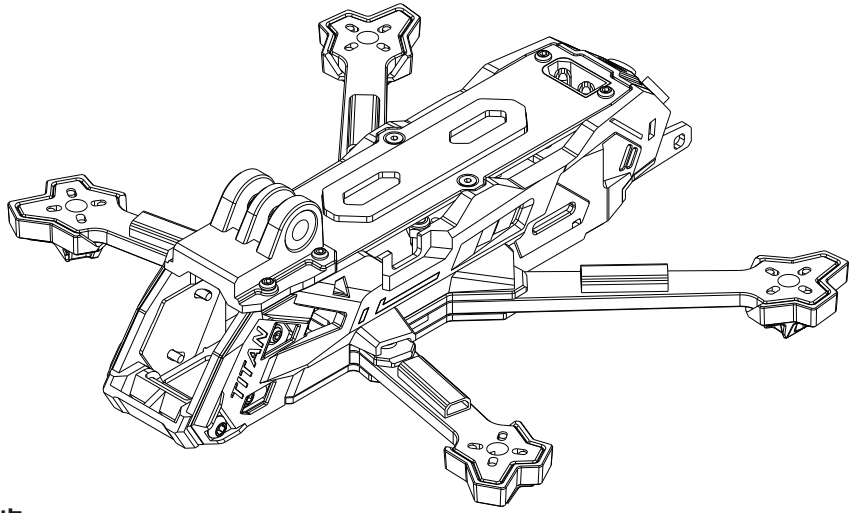

1 第一步 Part One

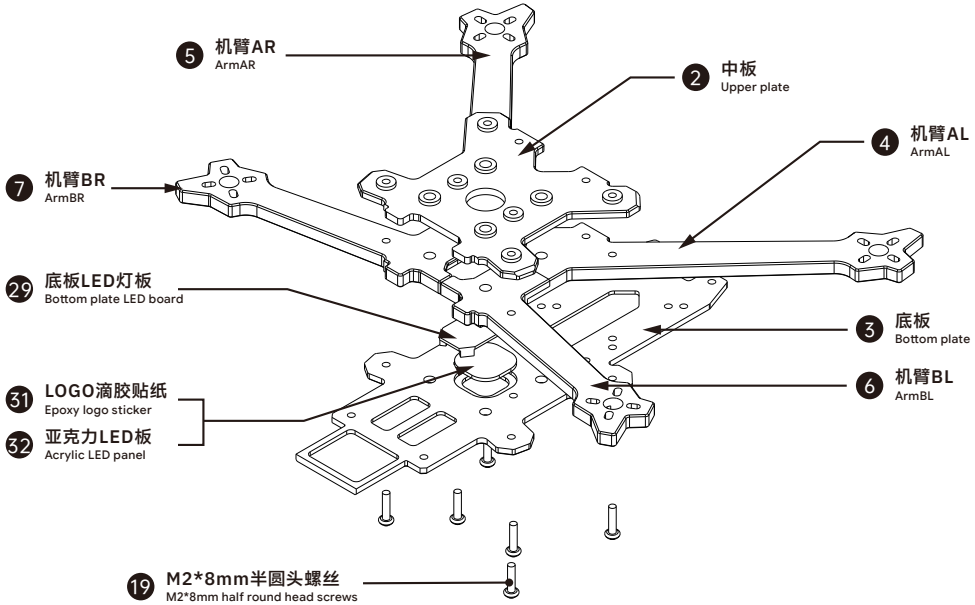

包装里有 / Packing list:

1	顶板 Top plate	*1
2	中板 Upper plate	*1
3	底板 Bottom plate	*1
4	机臂AL ArmAL	*1
5	机臂AR ArmAR	*1
6	机臂BL ArmBL	*1
7	机臂BR ArmBR	*1
8	摄像头铝合金侧板 CNC camera side plate	*2
9	摄像头硅胶侧板 Silicone camera side plate	*2
10	塑料侧板 Plastic side panel	*2
11	侧板导光件 Side panel light guide	*2
12	尾座 Antenna mount	*1
13	狗座底座 GoPro bottom stand	*1
14	天线固定座 Antenna holder	*2
15	保险杠 Front bumpers	*1
16	脚垫 Arm guard	*4
17	M2*6mm半圆头螺丝 M2*6mm half round head screws	*4
18	M2*7mm半圆头螺丝 M2*7mm half round head screws	*30
19	M2*8mm半圆头螺丝 M2*8mm half round head screws	*14
20	M2*12mm半圆头螺丝 M2*12mm half round head screws	*12
21	M3*8mm半圆头螺丝 M3*8mm half round head screws	*4
22	M3*26mm半圆头螺丝 M3*26mm half round head screws	*6
23	M2*6mm沉头螺丝 M2*6mm countersunk screws	*4
24	M2*4mm半圆头带垫螺丝 M2×4mm pan head screw with washer	*6
25	M2*20mm圆形网纹铝柱 M2*20mm standoff	*4
26	M2*21mm圆形网纹铝柱 M2*21mm standoff	*4
27	M3*22mm圆形网纹铝柱 M3*22mm standoff	*2
28	M3 防松自紧螺母 M3 screw nut	*6
29	底板LED灯板 Bottom plate LED board	*1
30	硅胶垫片 Silicone gasket	*1
31	LOGO滴胶贴纸 Epoxy logo sticker	*1
32	亚克力LED板 Acrylic LED panel	*1
33	集线管 16*7mm 16*7mm Motor wire shield tube	*2
34	集线管 24.5*7mm 24.5*7mm Motor wire shield tube	*2
35	XT60EW-M 公头 XT60EW-M battery plug	*1
36	格纹硅胶电池防滑垫 Battery pad	*2

(附赠)/(Additional parts)

37	LED灯带 LED strip	*2
38	LED导光条 LED light tube	*1
39	LED转接板 LED adapter board	*1
40	15*200mm电池扎带 15*200mm Battery strap	*2
41	3P端子线 3 pin terminal connector	*1
42	4P端子线 4 pin terminal connector	*1
43	产品贴纸 Product sticker	*1
44	内六角扳手 Allen wrench	*1
45	M5防松螺母 M5 screw nut	*1
46	M5*20mm平头螺丝 M5*20 hex screw	*1

2 第二步
Part Two

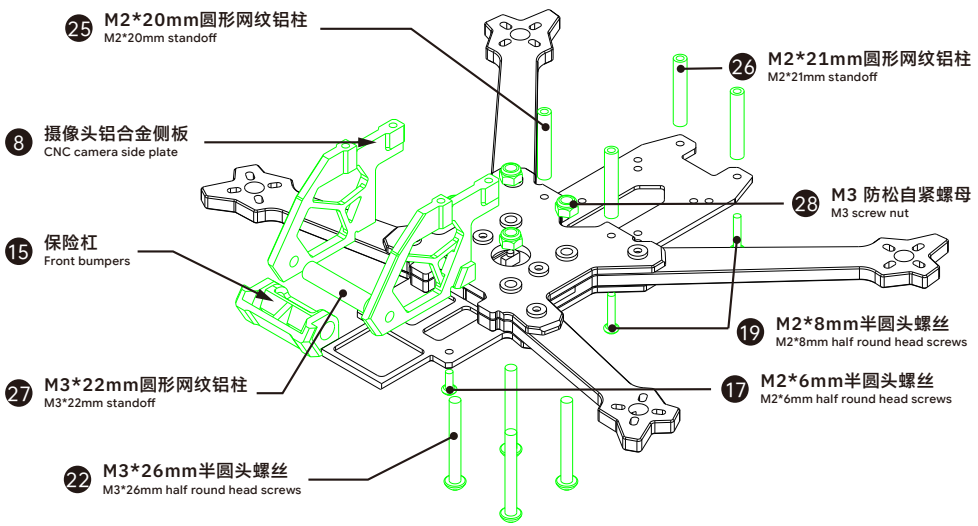

3 第三步
Part Three

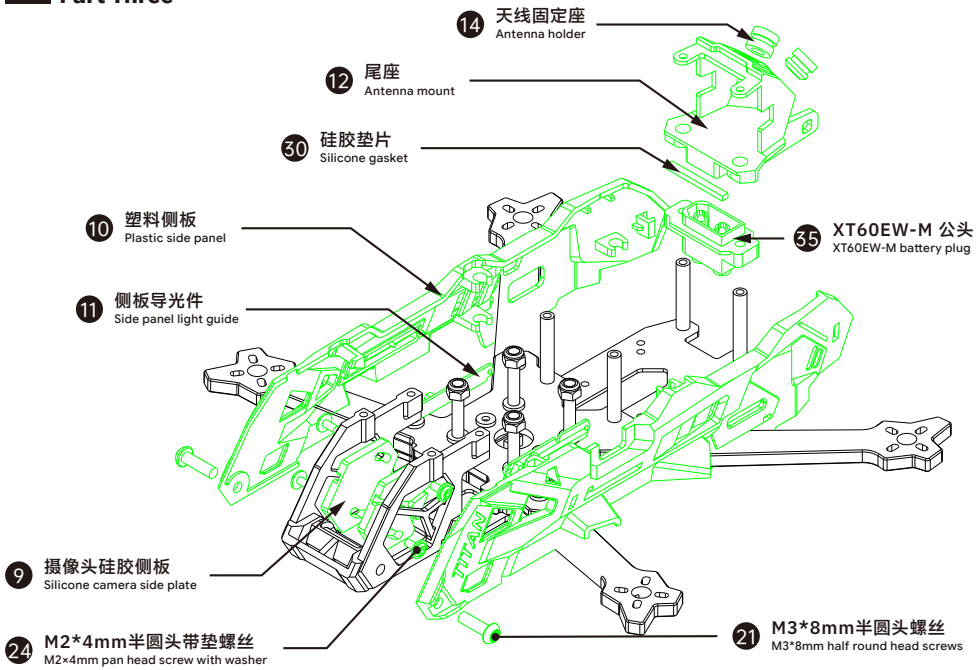

4 第四步
Part Four

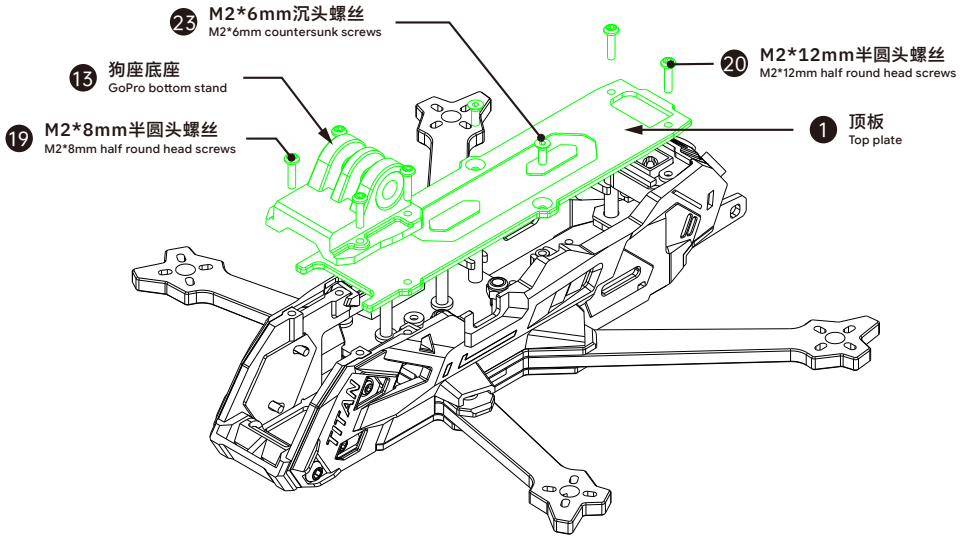

5 第五步
Part Five

