TITAN X2 机架组装说明书

TITAN X2 FRAME ASSEMBLY GUIDE

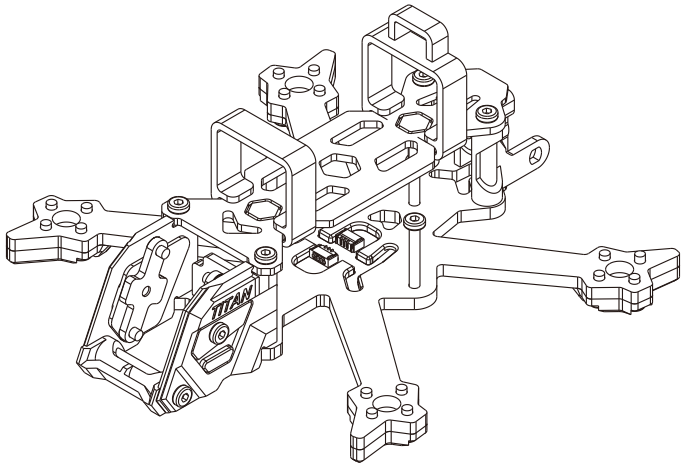

包装里有 / Packing list:

1	顶板 Top plate	*1
2	底板 Bottom plate	*1
3	摄像头铝合金侧板 CNC camera side plate	*2
4	铝合金连接件 Aluminum alloy connector	*2
5	摄像头硅胶侧板 Silicone camera side plate	*2
6	电池仓A Battery compartment A	*1
7	电池仓B Battery compartment B	*1
8	尾座 Antenna mount	*1
9	保险杠 Front bumpers	*1
10	脚垫 Arm guard	*4
11	M2*3mm沉头螺丝 M2*3mm countersunk screws	*5
12	M2*3mm薄头螺丝 M2*3mm low-profile screws	*3
13	M2*5mm薄头螺丝 M2*5mm low-profile screws	*30
14	M2*16mm薄头螺丝 M2*16mm low-profile screws	*5
15	M2*16mm圆形网纹铝柱 M2*16mm standoff	*3
16	M2*18mm圆形网纹铝柱 M2*18mm standoff	*1
17	LOGO滴胶贴纸 Epoxy logo sticker	*1
18	Type-C 转接板A USB-C adapter board A	*1
19	底板LED灯板 Bottom plate LED board	*1
20	XT30U-M公头 XT30U-M battery plug	*1

(附赠)/(Additional parts)

21	M2*4mm半圆头螺丝 M2*4mm half round head screws	*10
22	M2*6mm半圆头螺丝 M2*6mm half round head screws	*10
23	M2*7mm半圆头螺丝 M2*7mm half round head screws	*10
24	双头端子线 2-way terminal wire	*1
25	三头端子线 3-way terminal wire	*1
26	产品贴纸 Product sticker	*1
27	内六角扳手 Allen wrench	*1

1 第一步 Part One

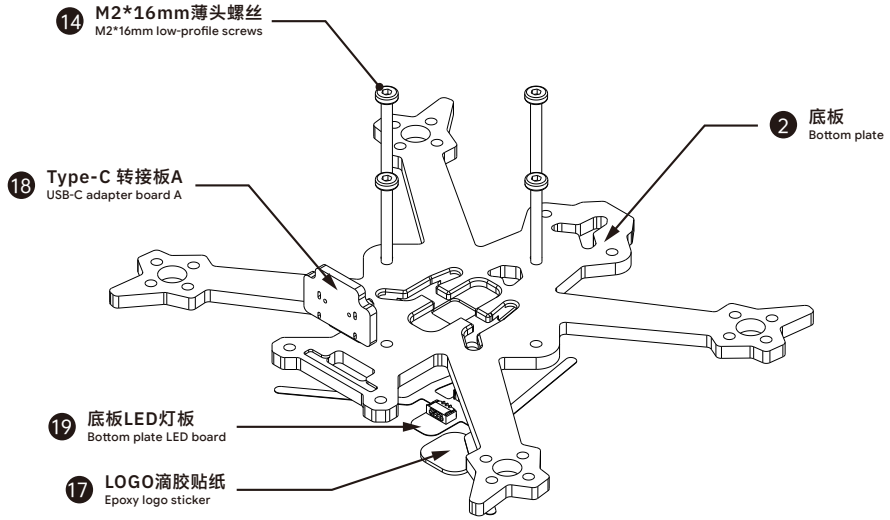

2 第二步 Part Two

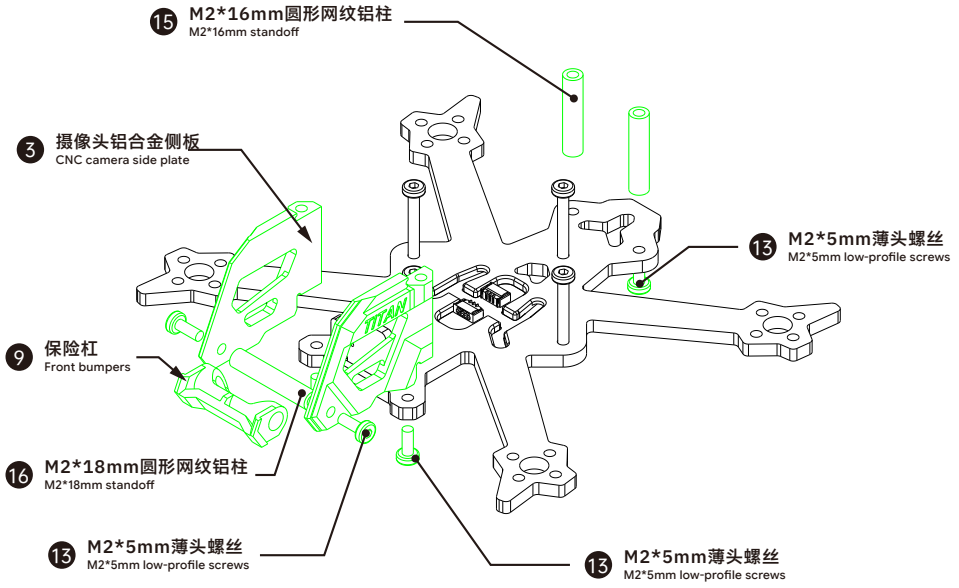

3 第三步
Part Three

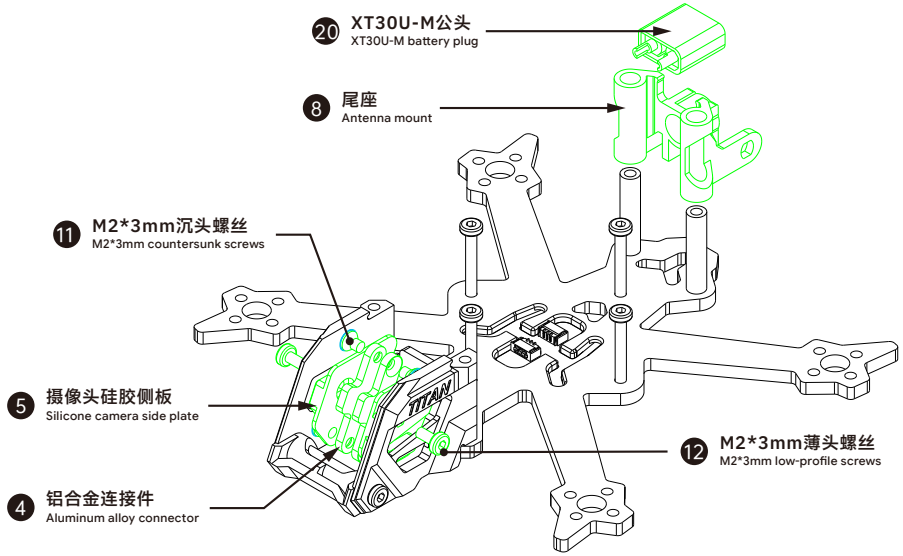

4 第四步
Part Four

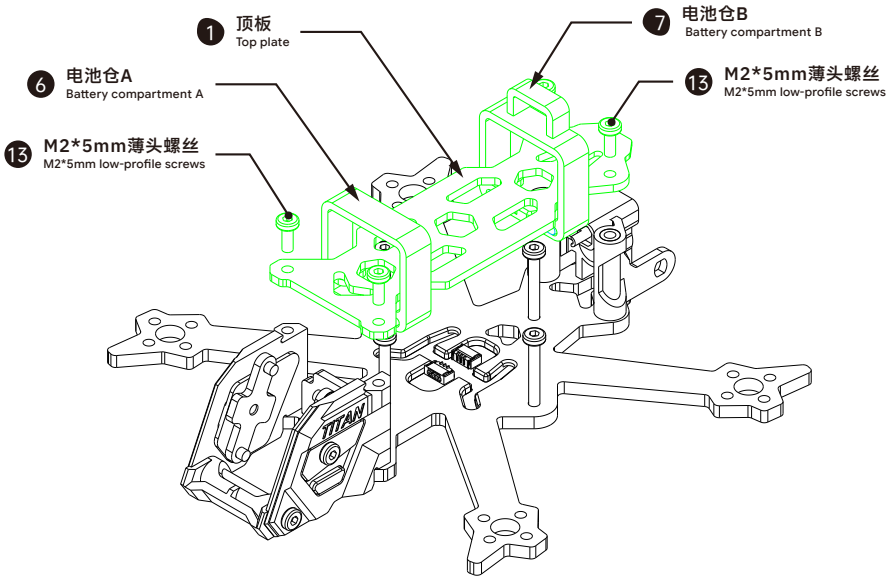

5 第五步
Part Five

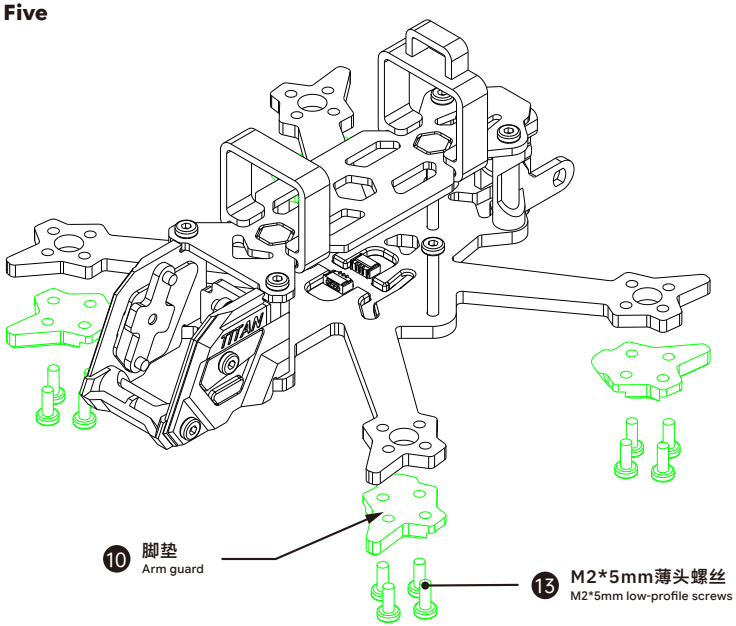

6 组装完成
Assembly completed

